# AI-Driven Hand Protection System

## 1. Introduction

This concept is for a smart system to prevent hand jamming in inlet door mechanism of ARCS. Traditional hand protection system has been carried out by both of contact type or contactless type. But the common Issue with these method is that sensor must be within a certain range of the target object. Sensing contact force is a typical method with contactless type. However, this method still has a potential risk to lead to a weak or certain level of injury and this approach also has problem such as strict sensor surface management or exceptional situation of errors caused by foreign objects.

To tackle this above issue and risk, AI-Driven Hand Projection is proposed. A color which is easy to be distinguished or identified is adapted for a target object for AI visual model. Yellow tape will be attached around the profile of the inlet hole and a camera installed at the top of the inlet hole will tracks the tape's size and position of the inlet in real time. Once any object hide the tape area partially, alarm signal will be generated and reopen the inlet door to avoid jamming it in between door mechanism.

## 2. Working Principle

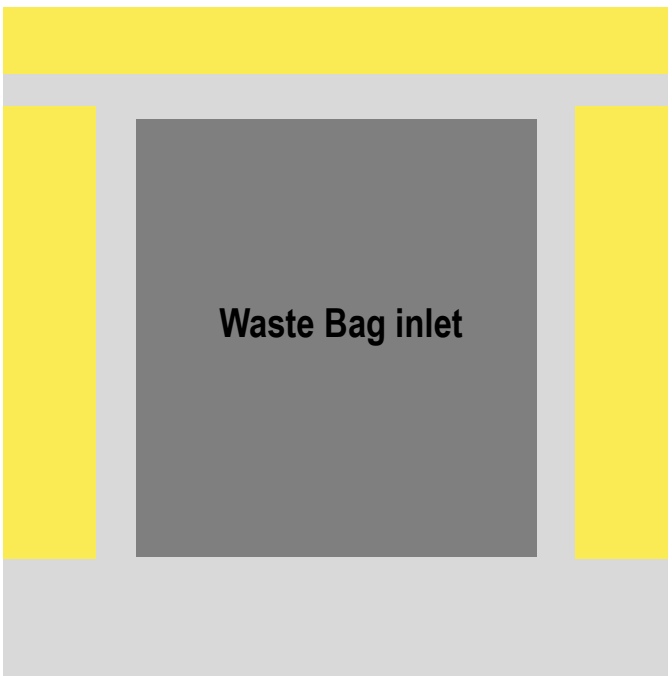


Fig. Top view of ARCS inlet

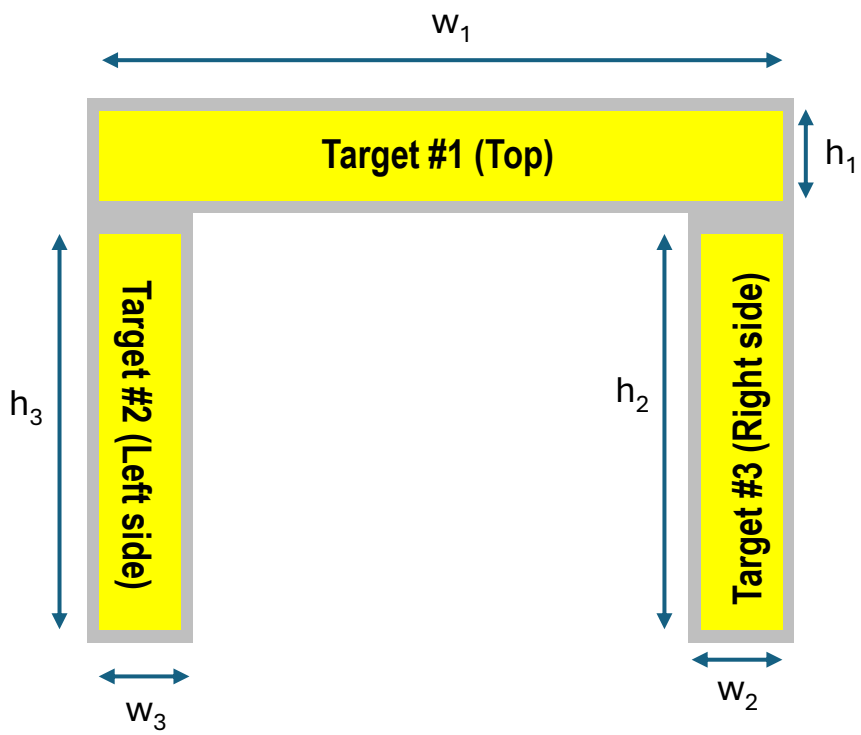


Fig. Layout of each tape

Three pieces of yellow tapes are attached around the inlet hole as shown above figure. As the image and color information (Color code) captured by camera is changeable by light, initial setting for code shall be carried out on site after acquisition of the photo or video of color tape attached on the inlet door hole.

In program, three target objects are supposed to be detected as follows:

1) Target Object #1 : Top
2) Target Object #2 : Left Side
3) Target Object #3 : Right Side

AI camera will capture each object as rectangular shape and acquire width and height of each object and track it in real time. If any object's height or width is less than threshold, alarm will be triggered.

# 3. Scenario

Analyzing each scenario possibly happened during operation is the essential to validate the working principle and build the algorithm of control program. Door's action only has (1) open (2) stop (3) close of three action and hand protection feature is only necessary while door is being closed. Thus, this system will be started when door is fully opened and ended when door is fully closed.

**1) Scenario #1 : Door is fully opened - Deactivation of Hand Protection Mode**

For saving energy and minimize operation time of AI camera for extend its lifetime, this camera will be turned on when door is fully opened and standby for client placing waste bag into the inlet hole. Thus, the algorithm to recognize door is fully opened is

**Hand Protection Mode Activation**

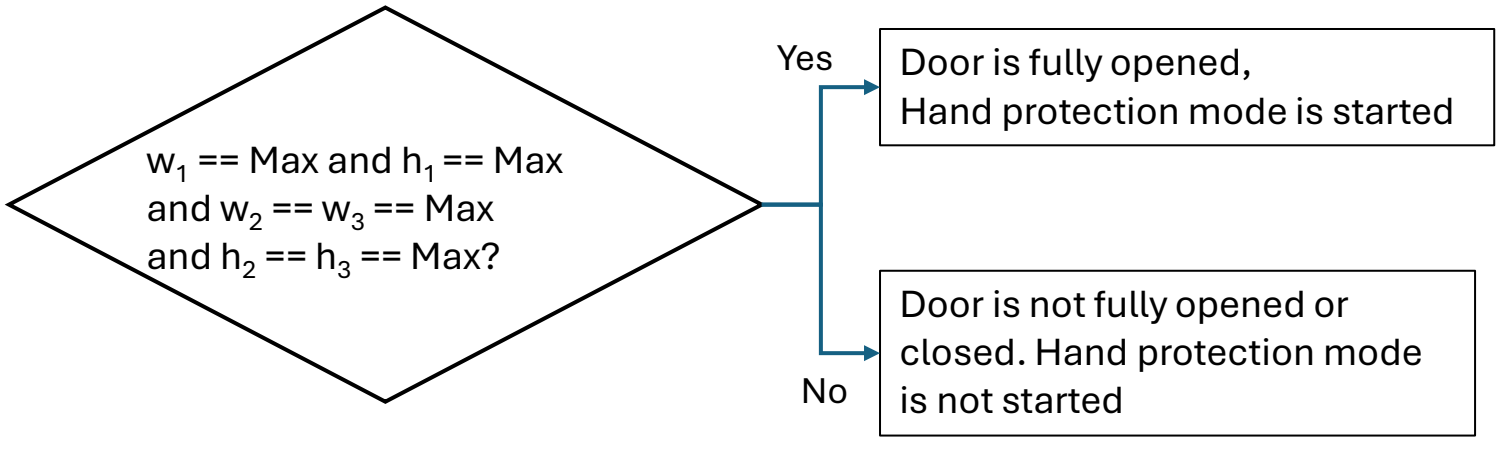


**Normal Situation : Door fully opened and Door is being close**

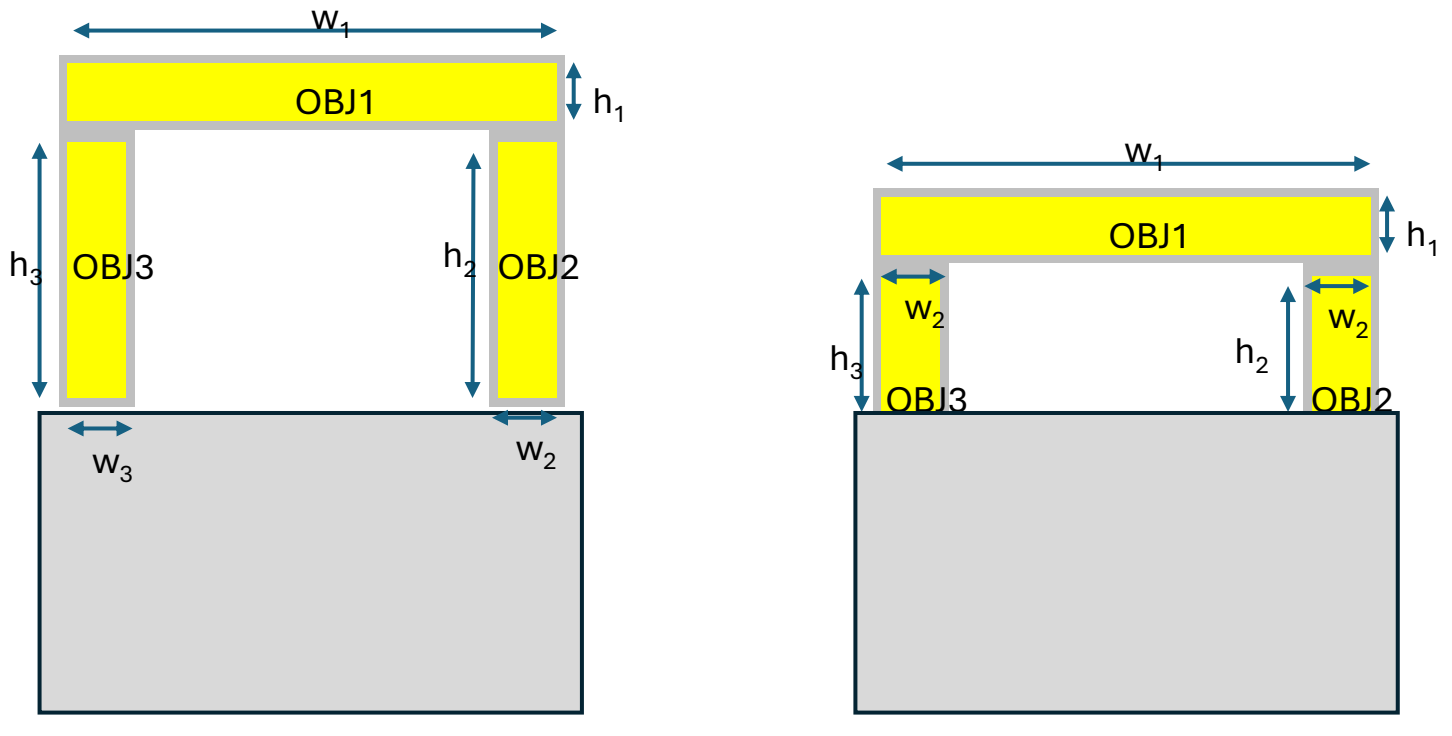

## 2) Scenario #2 : Different scenario of hand jamming

There are a total of three sides where a person's hand can access from outside to inside. Thus, each object will can detect the approaching hands in each direction respectively.

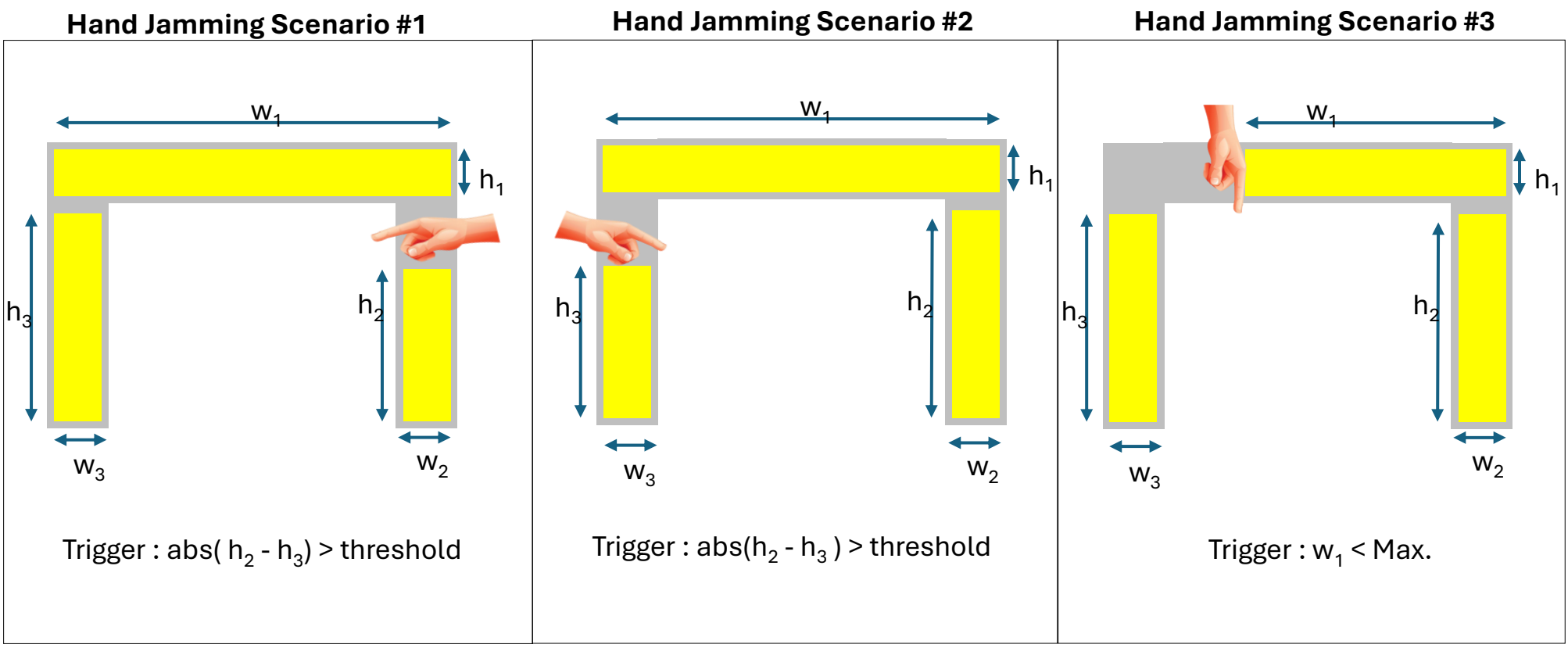


## 3) Scenario #3 : Door is almost closed

When door is almost closed, there is no gap in between door parts as the all of inlet hole go into the wall. Thus Hand protection feature is not necessary anymore in this case. To detect the status when door is almost closed Following algorithm is employed.

**Hand Protection Mode Deactivation**

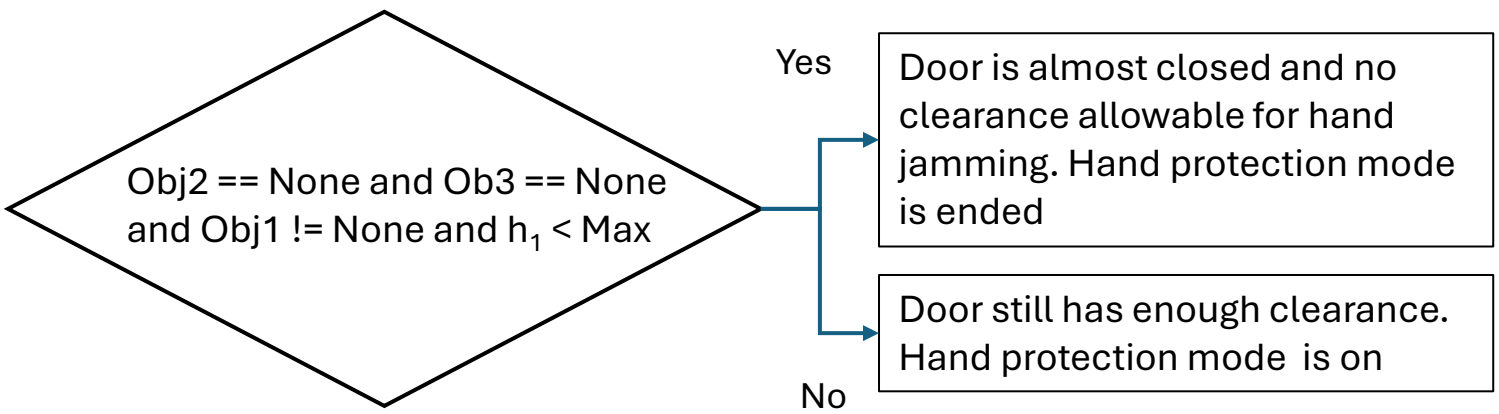


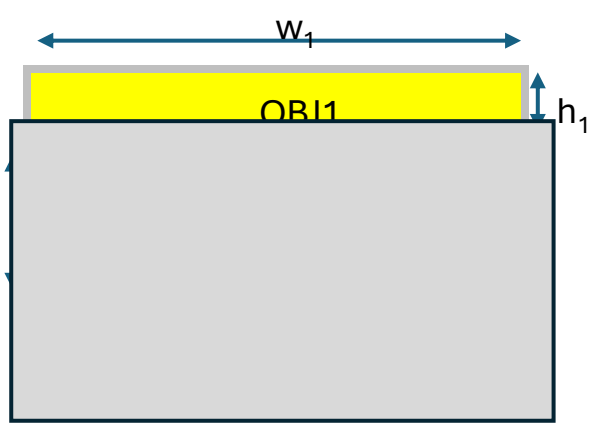

# Flow Chart for Control Program of AI Cam

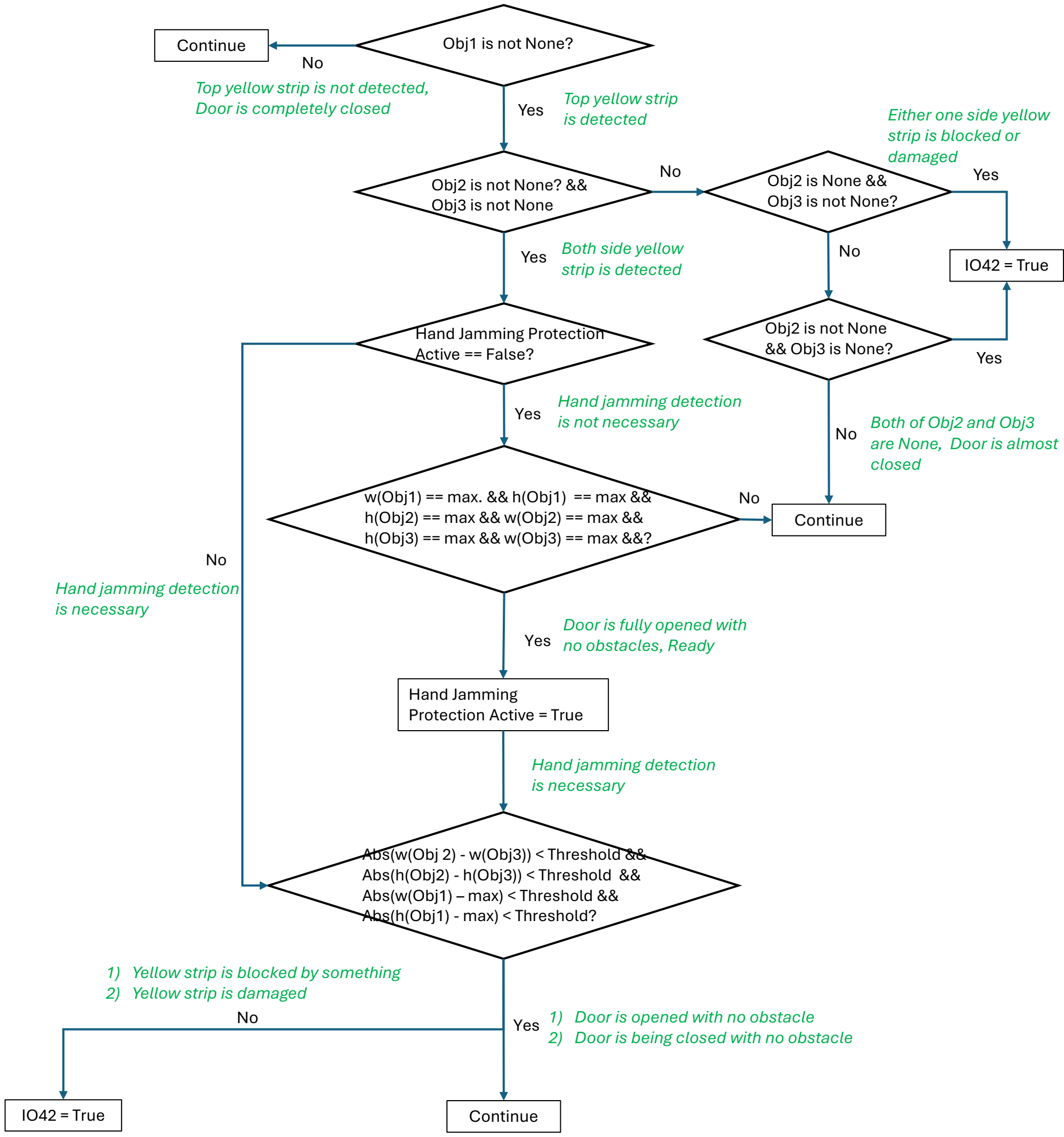

# Electrical Schematic for PLC and AI Camera

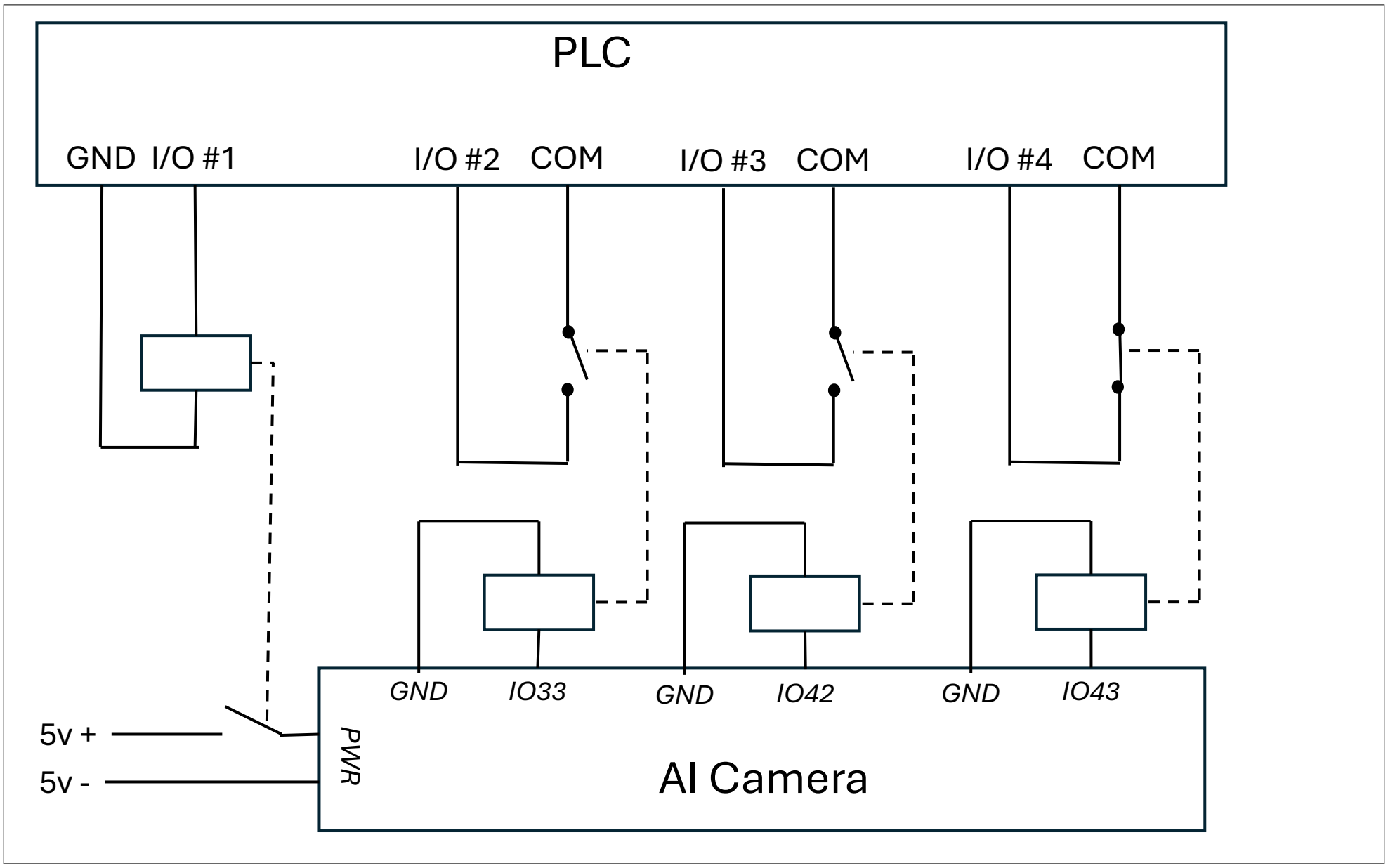


# Process Flow Chart between PLC and AI Cam

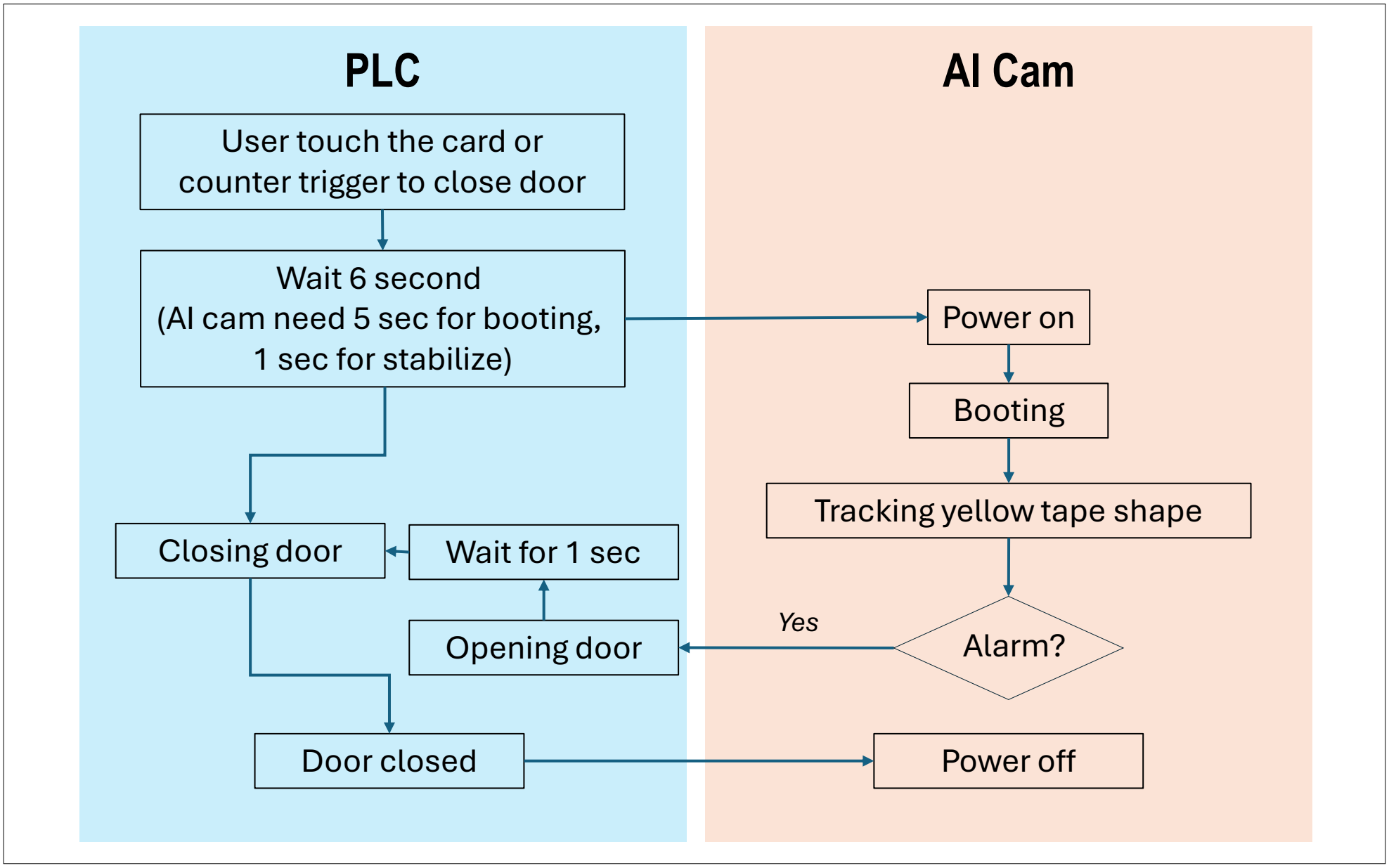

# Wiring Diagram for PLC and AI Camera

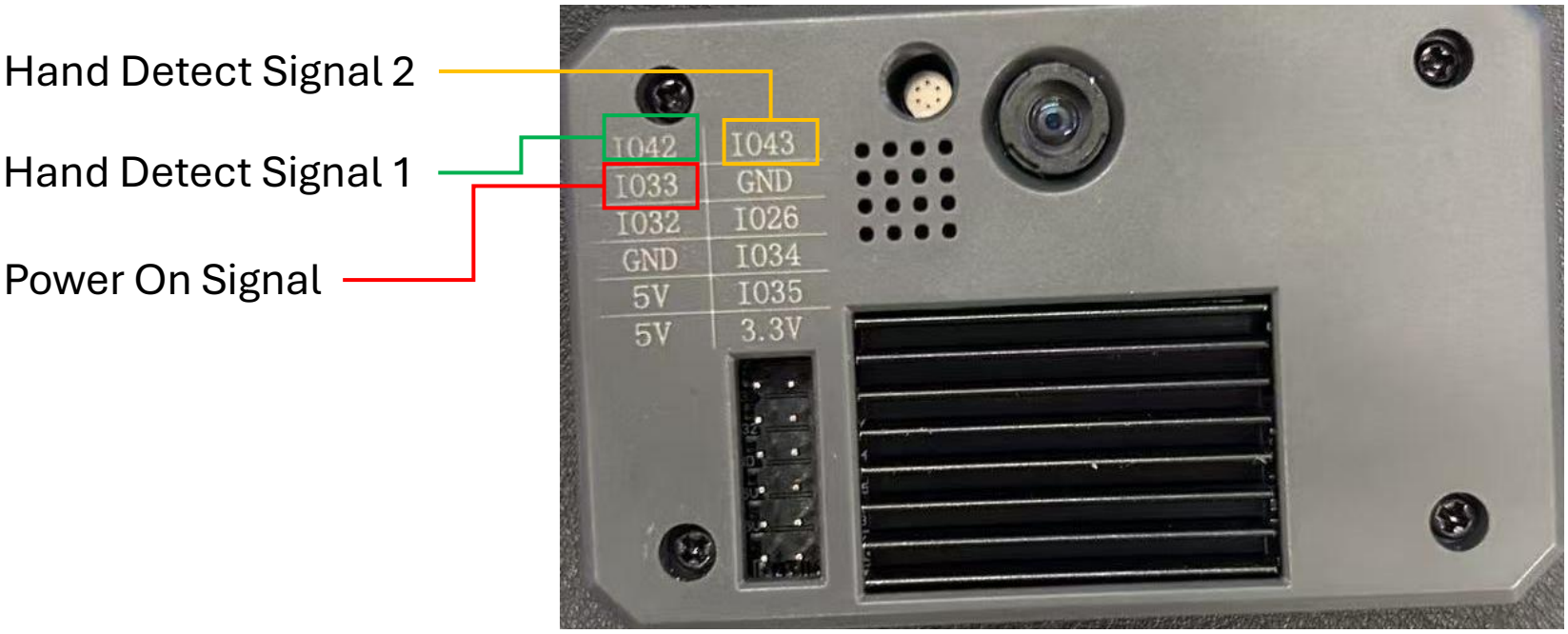


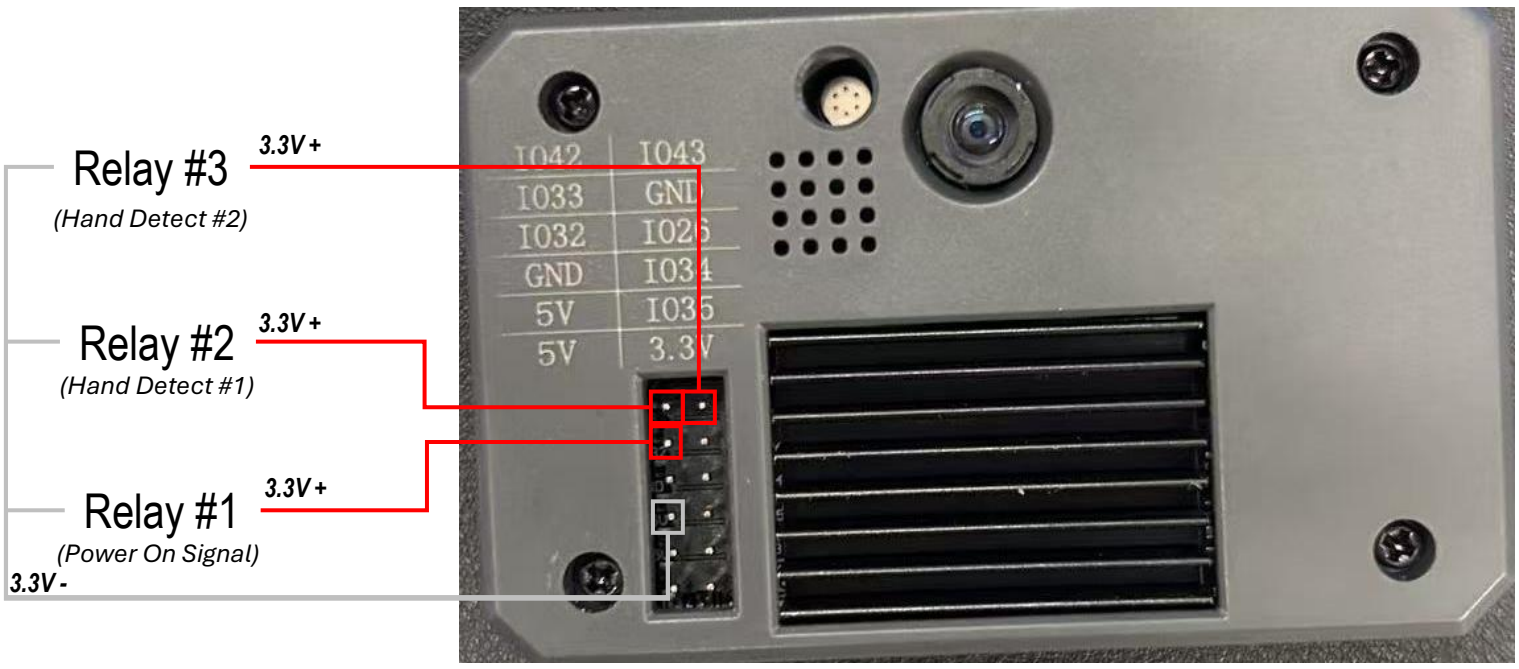


| | I/O on AI Cam' | Normal Status | Trigger | Triggered Status |
|---|---|---|---|---|
| Power On Signal | IO33 | 3.3V Low | AI Cam' powered on and program runs normally | 3.3V High |
| Hand Detect Signal 1 | IO42 | 3.3V Low | Hand is detected | 3.3V High |
| Hand Detect Signal 2 | IO43 | 3.3V High | | 3.3v Low |

## Adaptive Brightness Identification Logic

**Initial Logic :** Yellow colored area is detected based on the fixed threshold of LAB value

**Issue :** Result is unstable according to the change of brightness. Thus, performance is not reliable under different light source.

**Improvement :** Adapting “adaptive threshold” based on brightness.

1. Compute adaptive threshold : Measuring average brightness (L mean) and update L threshold calculating the difference between L mean and REF_BRIGHTNESS. Thus, when brightness is strong, L range goes up, when brightness is weak, L range goes down.

2. Compensation for low brightness : Extends A/B channel tolerance ±5 when average brightness is less than 30 (corresponding to increased color noise in dark environments)

| Change | Before | Now |
|---|---|---|
| LAB Threshold | L(30-110), A(-20,10), B(25,55) | L(15-100), A(-25,15), B(18,60) |
| Brightness compensation | Smoothing Global Histograms | Dynamic L-Channel Adjustment |